Monolithic Power Systems®

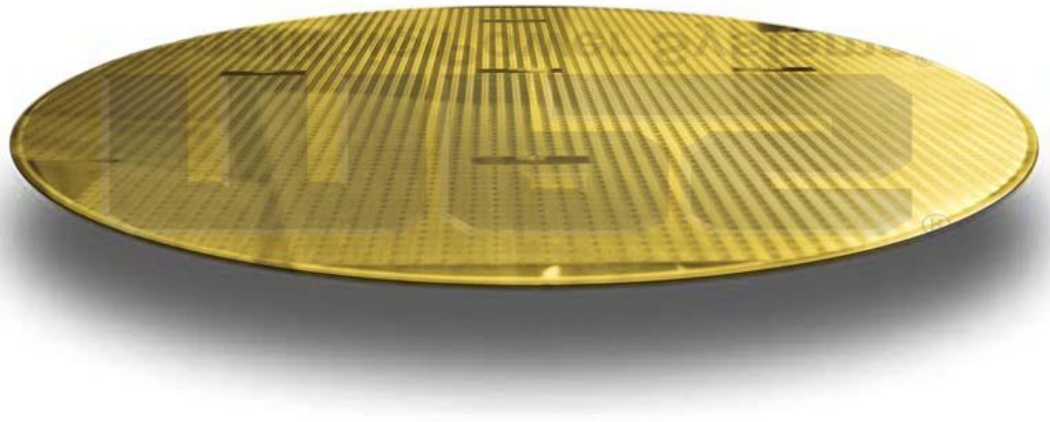

Xilinx Zynq US+ Auto ADAS power delivery

Last update
Feb 9, 2017

ADAS application–
Local sensor & processing (camera module)

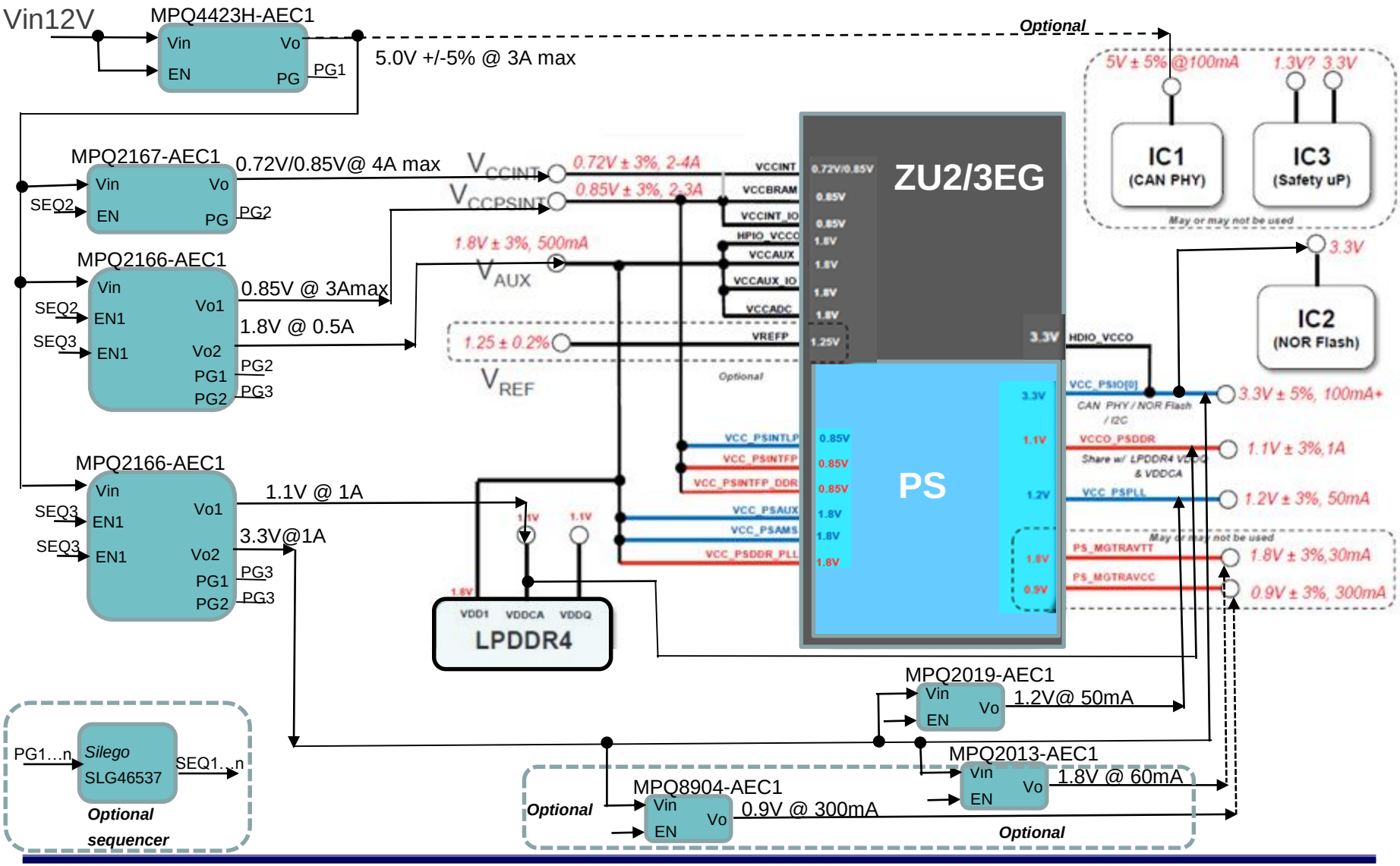

Design specifications – Local sensor & processing (camera module)

Rail	MPS part#	MPS specs Vin max, Iout	Vin	Vout	Load	Seq up/dwn	Footprint
5V Intermediate	MPQ4423H	36Vin, 3A	12V	5V ±5%	All (~2A)	1/3	QFN8 (3x3mm)
VCCINT	MPQ2167	6Vin, 4A	5V Intermediate	0.72/0.85V ±3%	2-4A	2/2	QFN11 (2x3mm)
VCC_PSINTLP, VCC_PSINTFP, VCC_PSINTFP_DDR, VCCBRAM, VCCINT_IO	MPQ2166	6Vin, dual 2A/2A, 3A/1A	5V Intermediate	0.85V ±3%	2-3A	2/2	QFN18 (2x3mm)
VCCAUX, VCCAUX_IO, VCCADC, HPIO_VCCO			5V Intermediate	1.8V ±3%	500mA	3/1	
VCCPSPLL	MPQ2019	40Vin, 300mA	VCC_PSIO	1.2V ±3%	50mA	3/1	QFN8 (3x3mm)
VCC_PSIO, HDIO_VCCO, NOR	MPQ2166	6Vin, dual 2A/2A, 3A/1A	5V Intermediate	3.3V ±5%	2A max	3/1	QFN18 (2x3mm)
VCCO_PSDDR, LPDDR_VDDQ, LPDDR_VDDCA			5V Intermediate	1.1V ±3%	1A	3/1	

Optional Rails							
PS_MGTRAVCC (optional)	MPQ8904	6.5Vin, 0.5A	VCC_PSIO	0.9V ±3%	300mA	3/1	QFN8 (2x3mm)
PS_MGTRAVTT (optional)	MPQ2013A	40Vin, 150mA	VCC_PSIO	1.8V ±3%	60mA	3/1	QFN8 (3x3mm)
VREF	N/A		5V Intermediate	1.25V ±0.2%	1mA		
VIC1	from 5V Intermediate		5V Intermediate	5V ±5%	100mA		

Monitoring capability– Integrated

- MPS products offer many integrated monitoring features

	Over Voltage Protection	Over Current Protection	Thermal Shutdown	Power Good	Under Voltage Lockout
MPQ4423H	no	yes	yes	yes	yes
MPQ2167	yes	yes	yes	yes	yes
MPQ2166	no	yes	yes	yes	yes
MPQ8904	yes	yes	yes	yes	no
MPQ2013A	yes	yes	yes	no	no
MPQ2019	yes	yes	yes	yes	no
MPQ2908A	yes	yes	yes	yes	yes
MPQ4470	yes	yes	yes	yes	yes
MPQ4423	no	yes	yes	yes	yes

Monitoring capability– Optional (non Integrated)

Additional monitoring features available

MPQ6400-AEC1

- Can monitor and provide reset function for system voltages from 0.4V
- Precision reference to achieve +/- 1% threshold accuracy
- Programmable Reset Delay Time: 2.1ms to 10s
- Can monitor multiple system voltages
- SENSE Voltage Transients Immunity
- Low Quiescent Current – 1.6uA makes it ideal for battery-powered applications

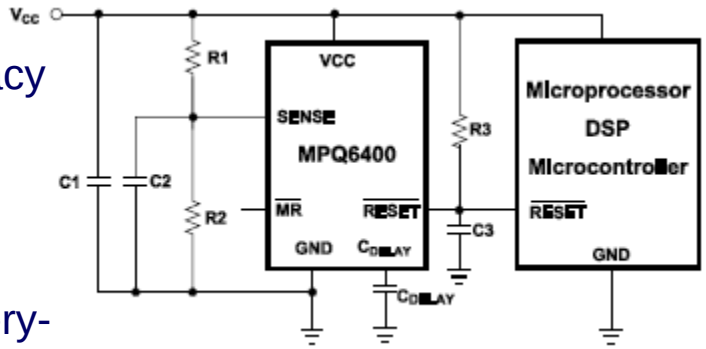

MPQ6411-AEC1

- Monitor MCU Synchronization Signal
- Programmable Short Window Mode/Long Window Mode
- Watchdog Disable Function
- WDI Error
- Low Shutdown Mode Current
- Power-On Reset during Power-Up and Under Voltage

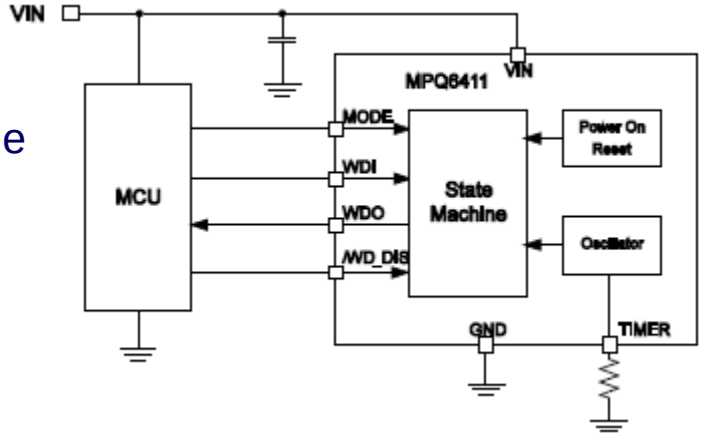

Schematics (Typical)

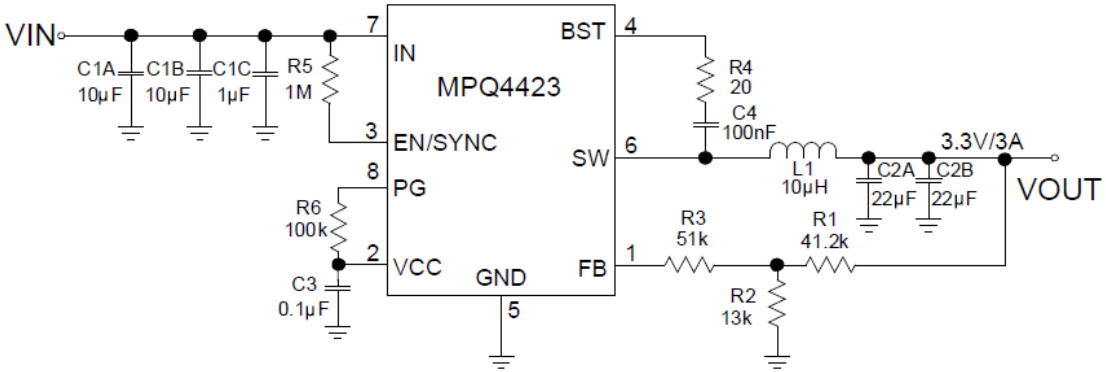

Layout guidelines

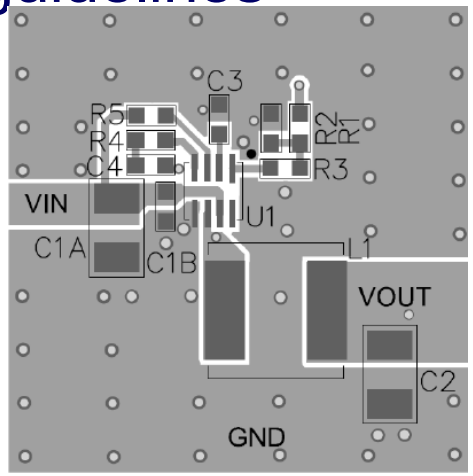

Top Layer

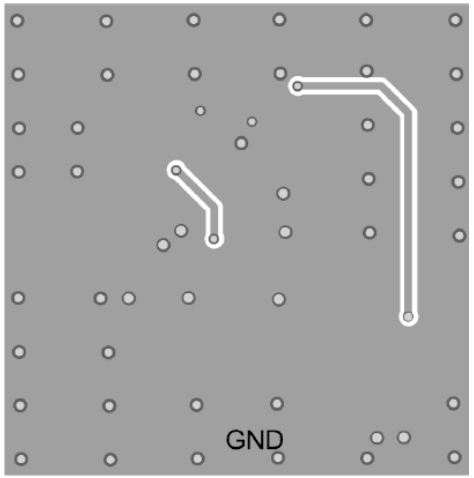

Bottom Layer

- For Rails: 5V Intermediate
- Regulator footprint: QFN8 (3x3mm)
- External Components: 14
- Efficiency: Vin = 12V, Vout = 5V, Iout = 3A, 89%
- Estimated PCB Area (sq mm): 83

Schematics (Typical)

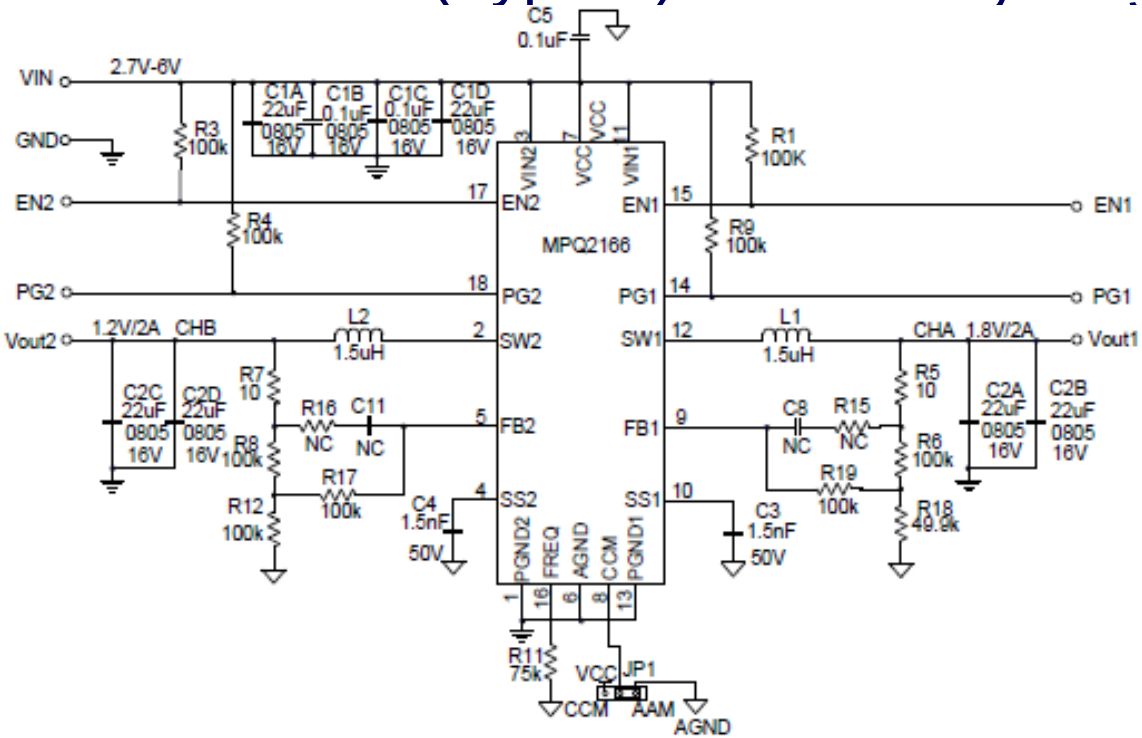

Layout guidelines

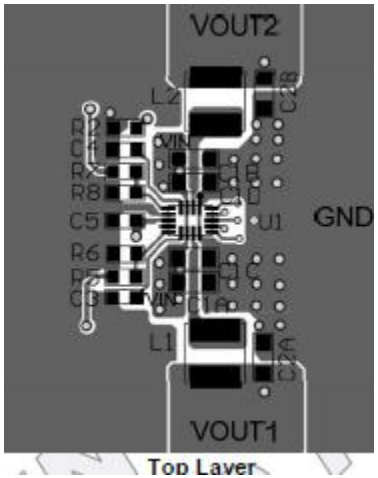

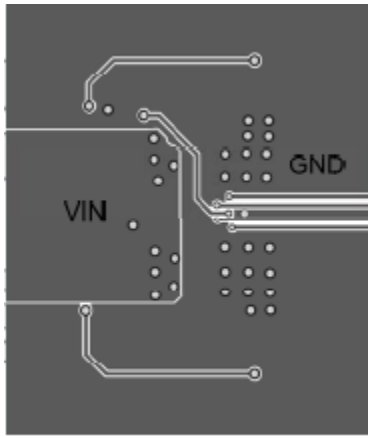

- For Rails: VAUX, VCCPSINT, VCCPSIO, VCCPSDDR
- Dual Regulator footprint : QFN18 (2x3mm)
- External Components: 14 per regulator
- Efficiency: Vin = 5V, Vout = 1.8V, Iout = 1A, 91%
- Estimated PCB Area (sq mm): 27.5 per regulator

Schematics (Typical)

Layout guidelines

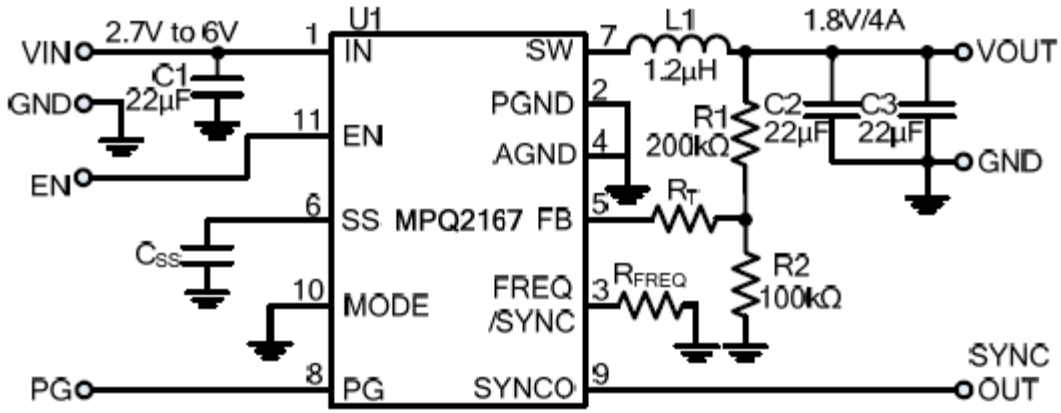

- For Rails: VCCINT
- Regulator footprint: QFN11 (2x3mm)
- External Components: 8
- Efficiency: Vin = 5V, Vout = 1.2V, Iout = 3A, 90%
- Estimated PCB Area (sq mm): 34

Schematics (Typical)

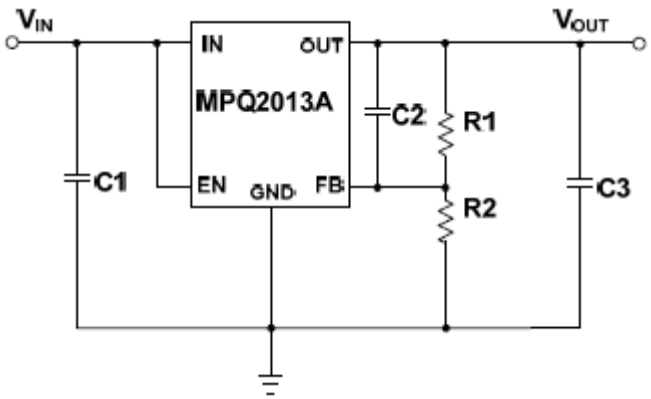

Layout guidelines

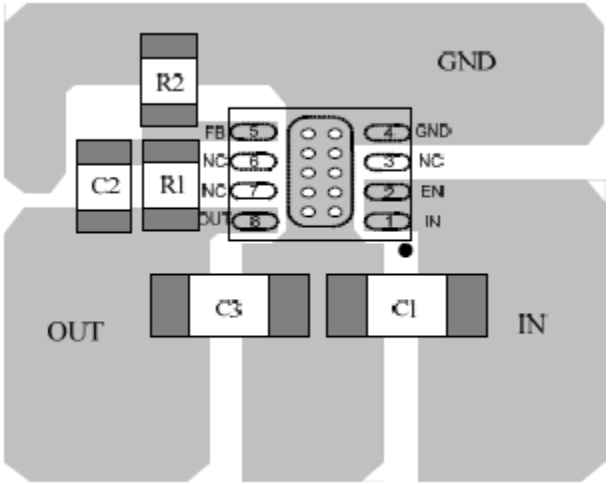

Figure 5: PCB Layout (Top Layer)

- For Rails: VPS_MGTRAVTT
- Regulator footprint: QFN8 (3x3mm)
- External Components: 5
- Efficiency: Vin = 3.3V, Vout = 1.8V, 54%
- Estimated PCB Area (sq mm): 13

Schematics (Typical)

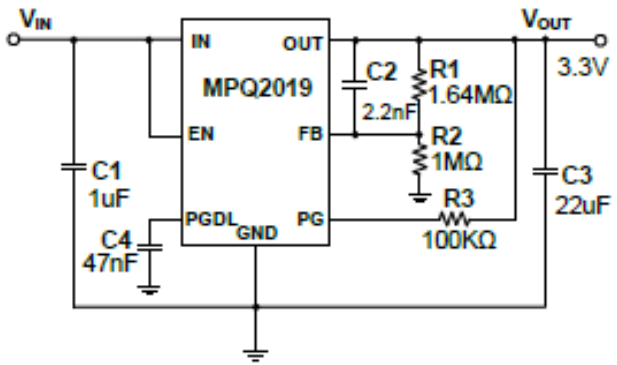

Layout guidelines

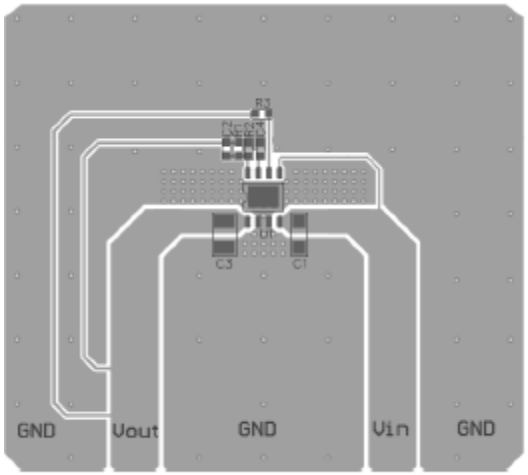

Top Layer

- For Rails: VCCPSPLL
- Regulator footprint: QFN8 (3x3mm)
- External Components: 7
- Efficiency: Vin = 3.3V, Vout = 1.2V, 36.4%
- Estimated PCB Area (sq mm): 14

Schematics (Typical)

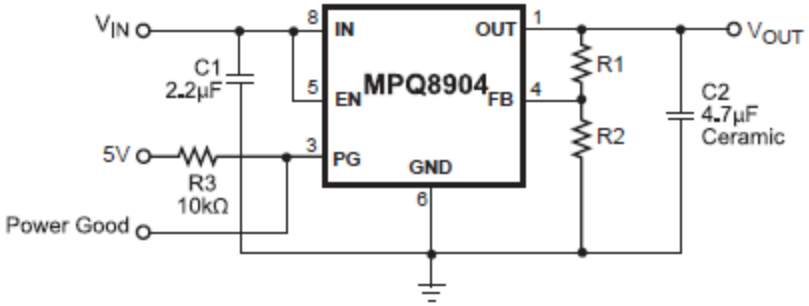

Layout guidelines

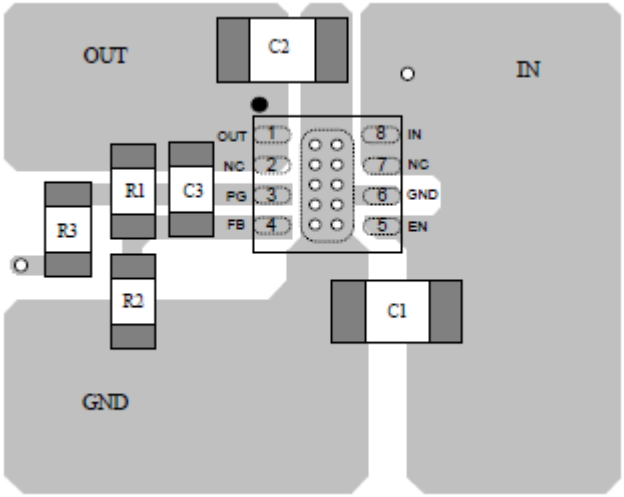

- For Rails: VPS_MGTRAVCC
- Regulator footprint: QFN8 (2x3mm)
- External Components: 5
- Efficiency: Vin = 3.3V, Vout = 0.9V, 27.3%
- Estimated PCB Area (sq mm): 10

MPS design highlights

- All parts are AEC-Q100 Grade1
- Industry leading smallest footprints
- Dual buck regulators for further reduced footprint
- Separate regulators for VCCINT and VCCPSINT for maximum flexibility
- Enable and Power Good signals for simple power up sequencing. Easy to add Silego sequencer for more complex requirements (AECQ qual pending)
- Over-current protection and thermal shutdown for added safety

Thank you

For additional information please contact

MPS Reference Design Team

at referencedesign@monolithicpower.com

For general information

http://www.monolithicpower.com